**TEAR SHEET**

**Walker Medium Two Tier Chandelier**

Item # KS 5070G-L/BL

Designer: kate spade new york

O/A Height: 54.75"
Fixture Height: 20.25"
Min. Custom Height: 31.5"
Width: 37"
Canopy: 4.5" Round
Finishes: BSL, G
Shade Treatments: L, L/BL
Shade Details: 10" x 10" x 5.5"
Socket: 6 - E12 Candelabra
Wattage: 6 - 60 G16.5
Weight: 9 Pounds

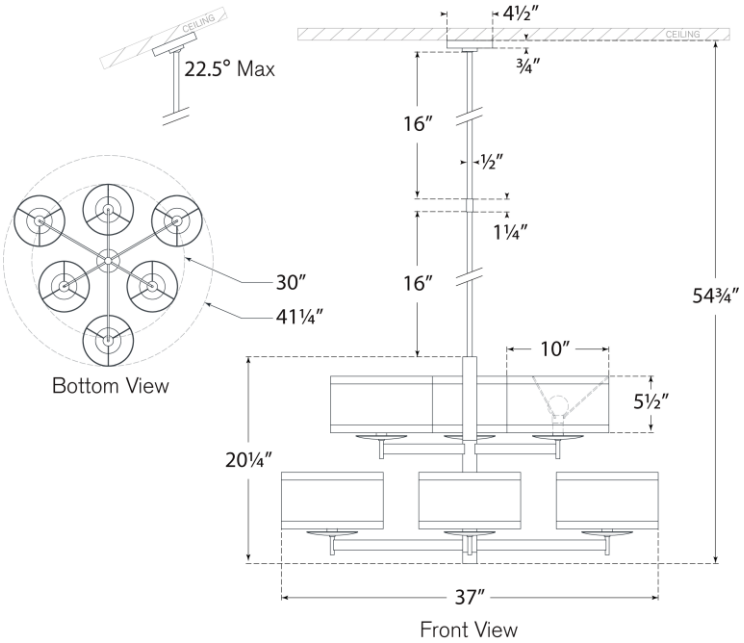


VISUAL COMFORT & CO.