TEAR SHEET

Bryant Single Bath Sconce

Item # TOB 2152AN-WG

Designer: Thomas O'Brien

Height: 8"
Width: 4"
Extension: 5.5"
Backplate: 4" x 5" Rectangle
Finishes: AN, BZ, BZ/HAB, HAB, PN
Glass Options: WG
Socket: E12 Candelabra
Wattage: 60 B11
Weight: 3 Pounds

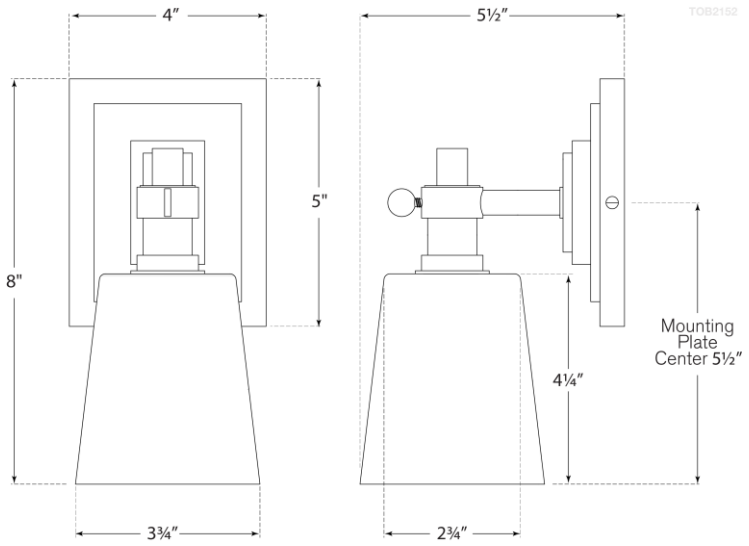

VISUAL COMFORT & CO.